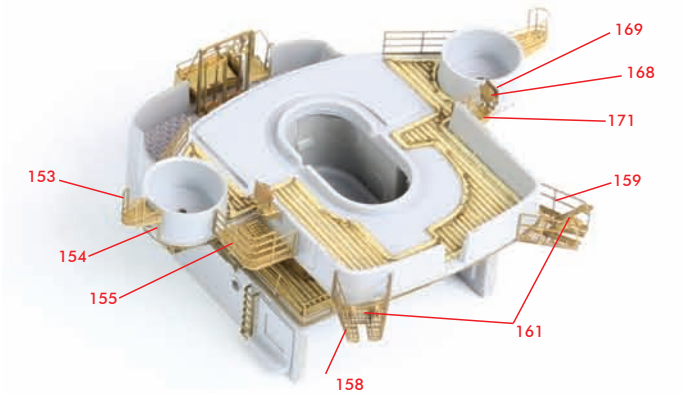

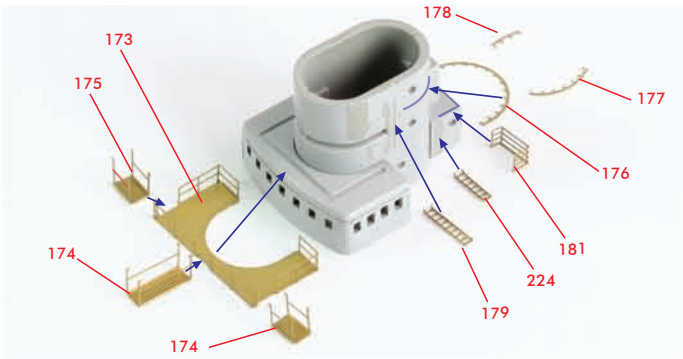

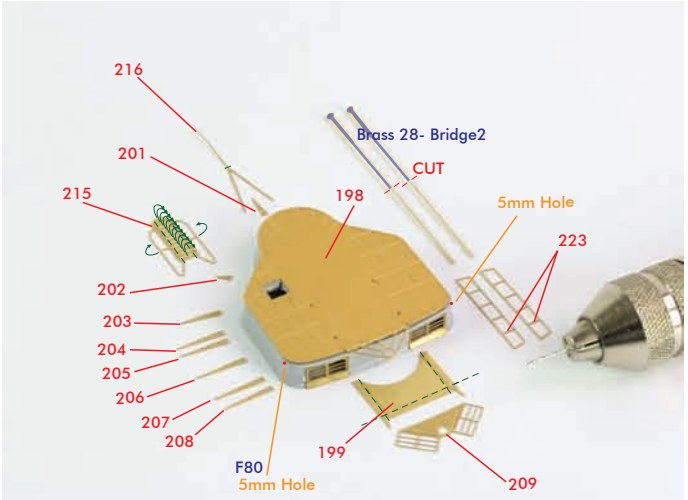

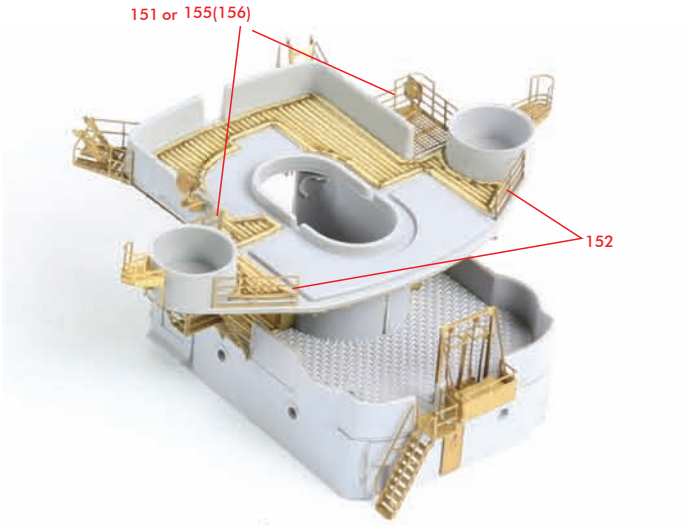

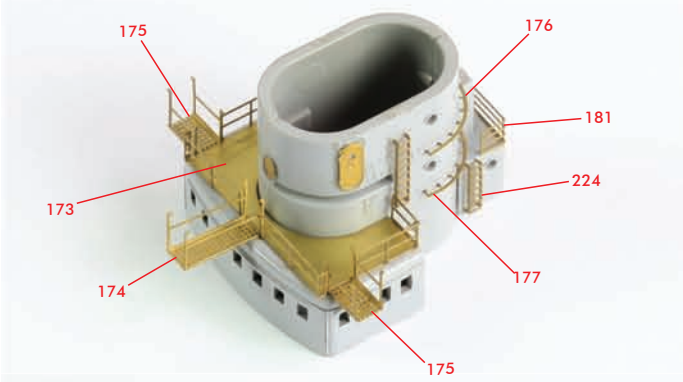

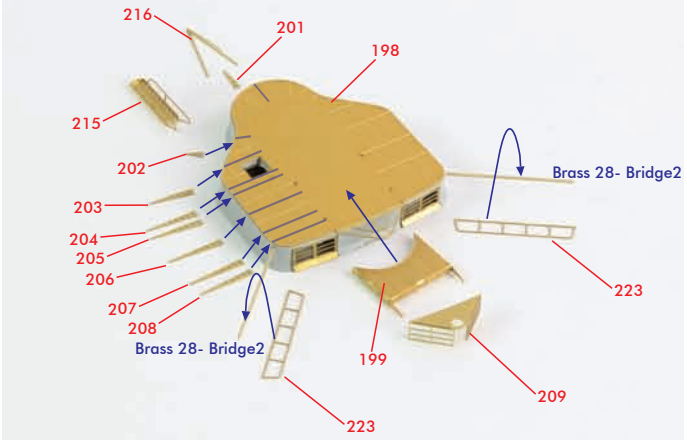

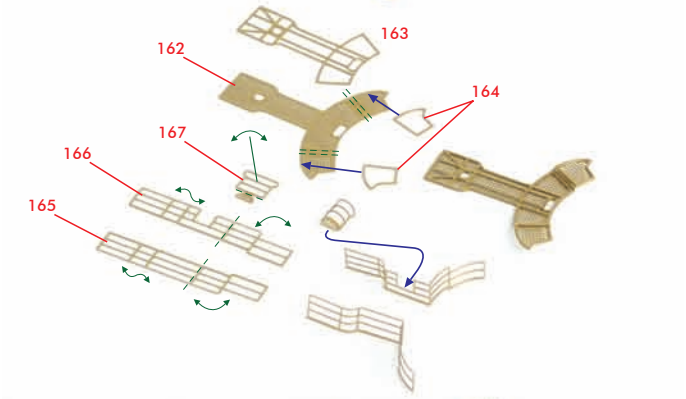

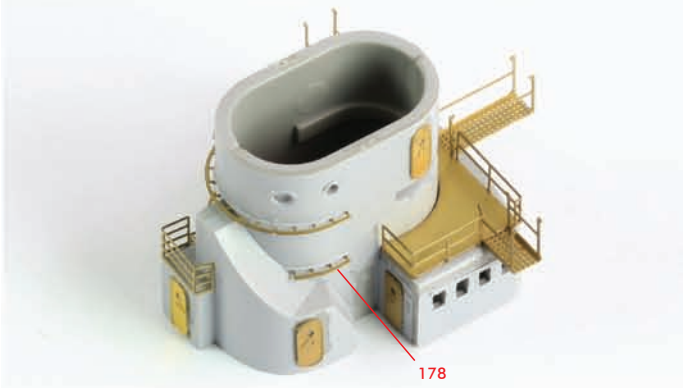

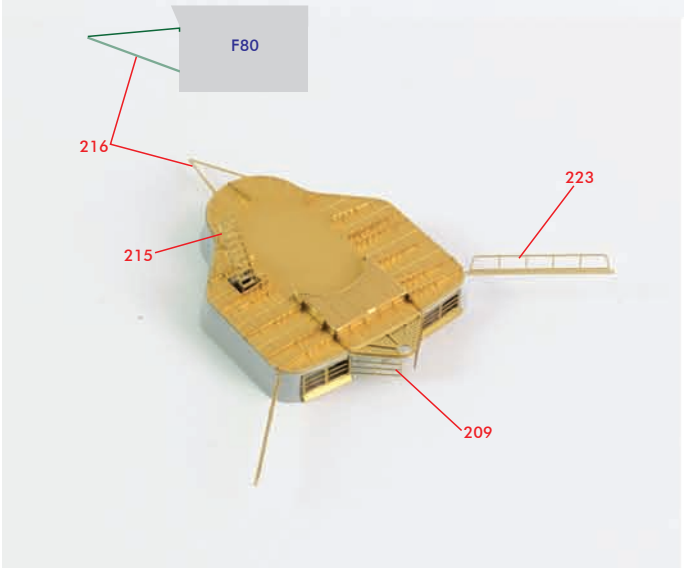

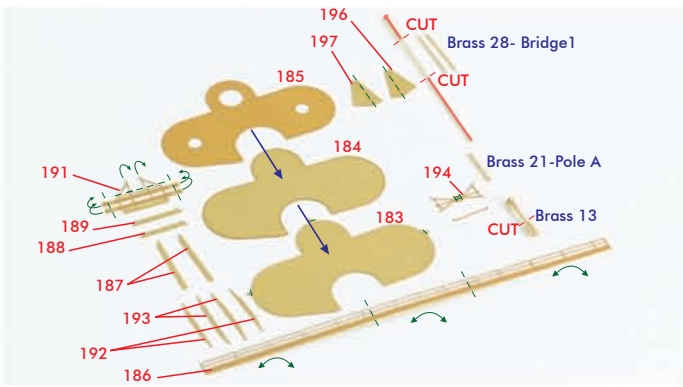

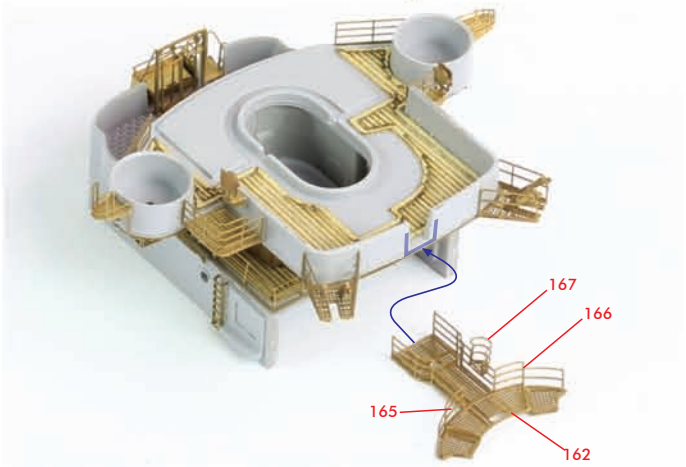

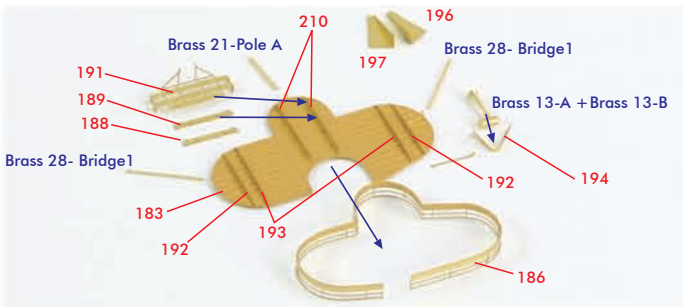

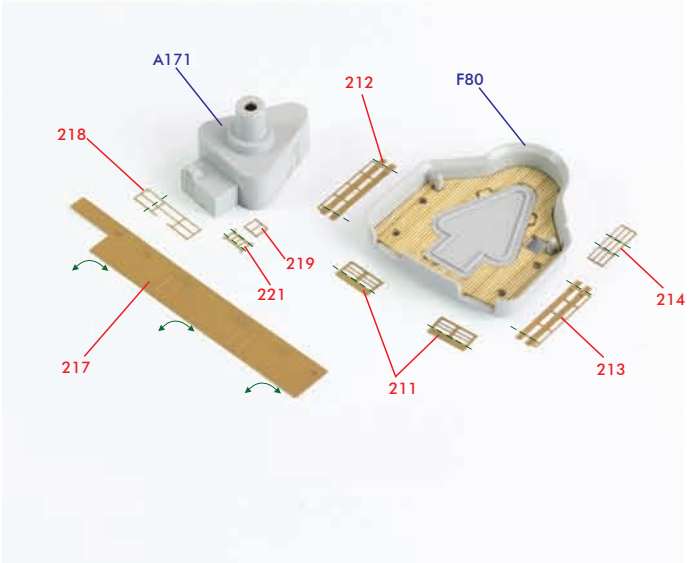

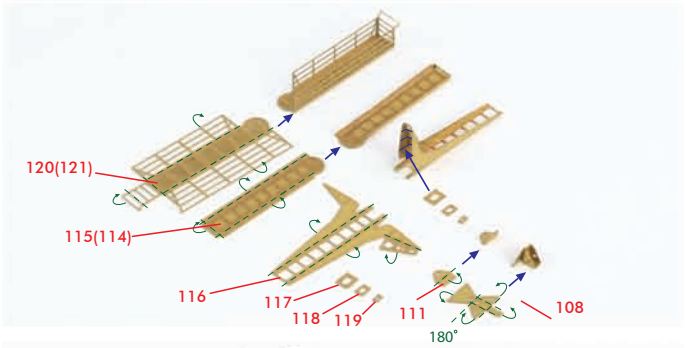

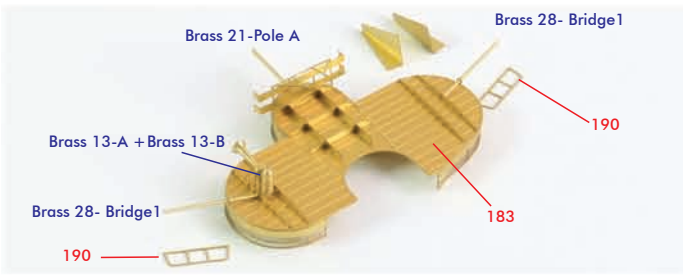

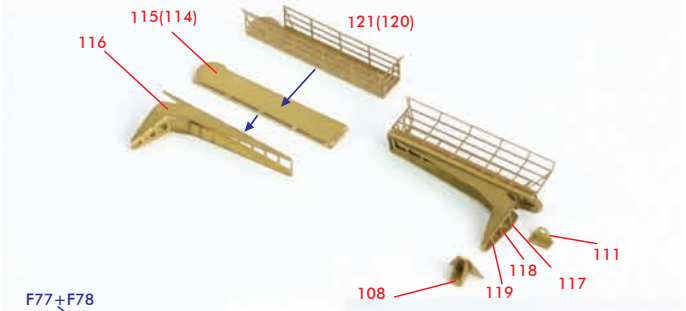

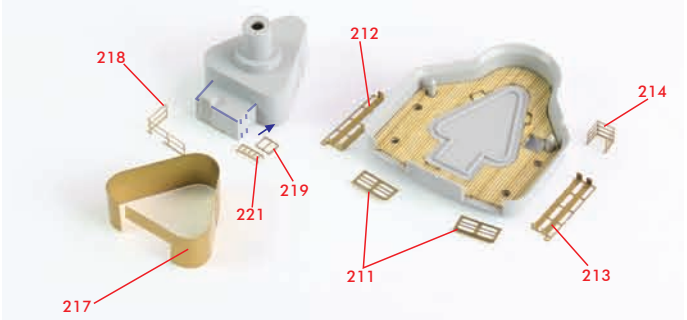

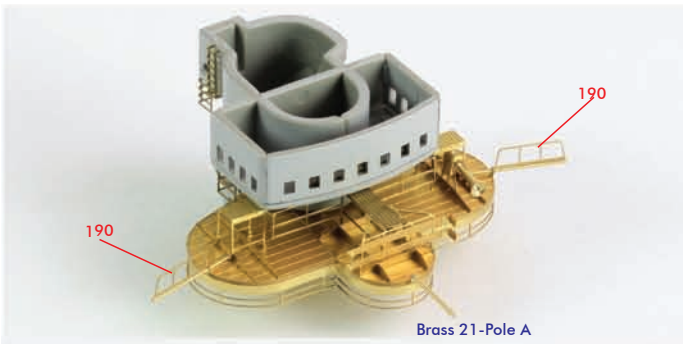

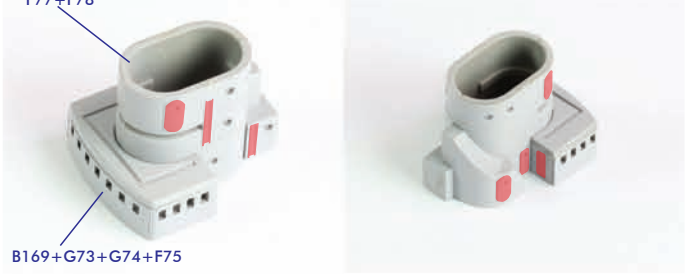

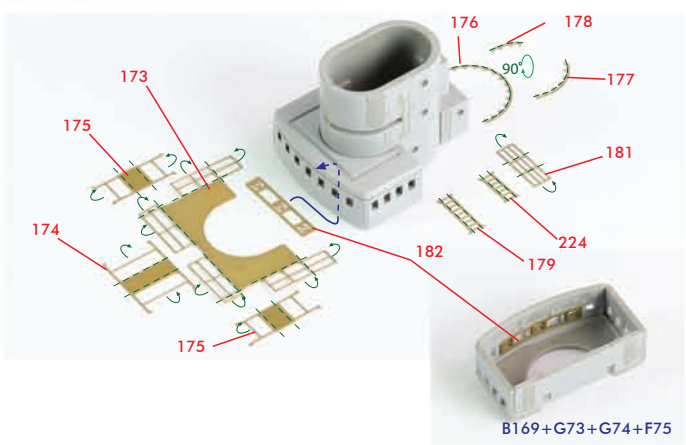

PONTOS
MODEL.COM
http://pontosmodel.com Email: help@pontosmodel.com
#910 Jungang 2, 144-5 Sangdaewon, Jungwon,
Seongnam, Gyeonggido 462-120 Korea
Hobbyway, INC. Printed in Korea