< After Bridge >

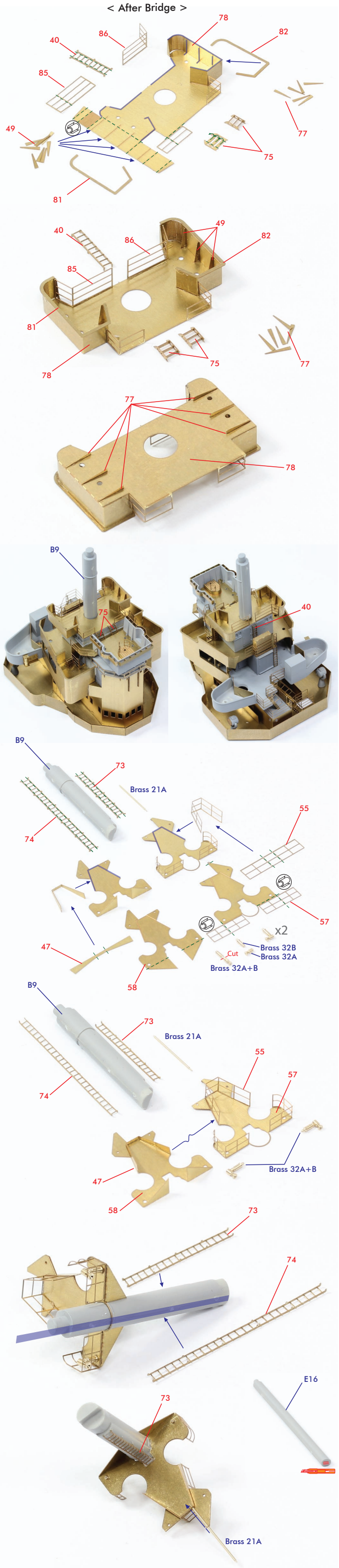

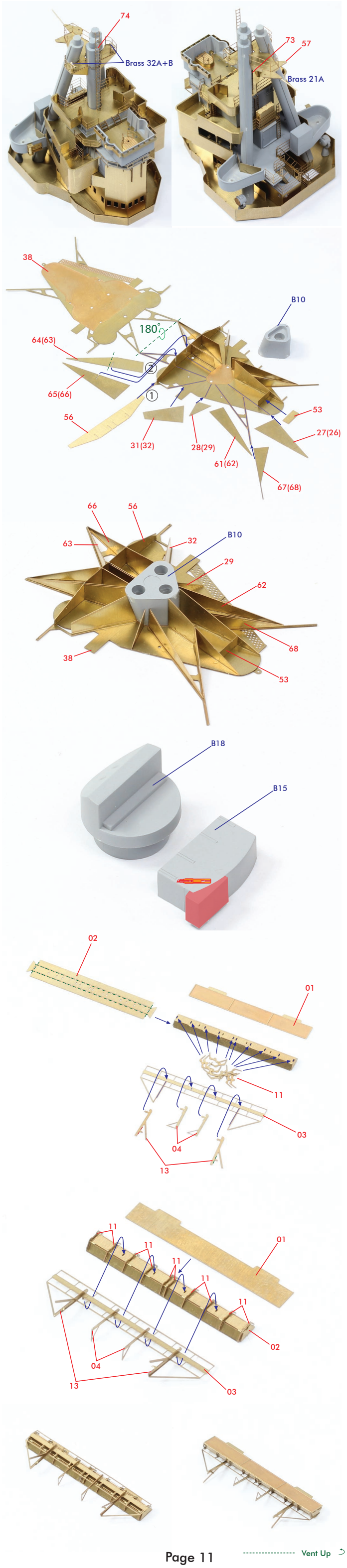

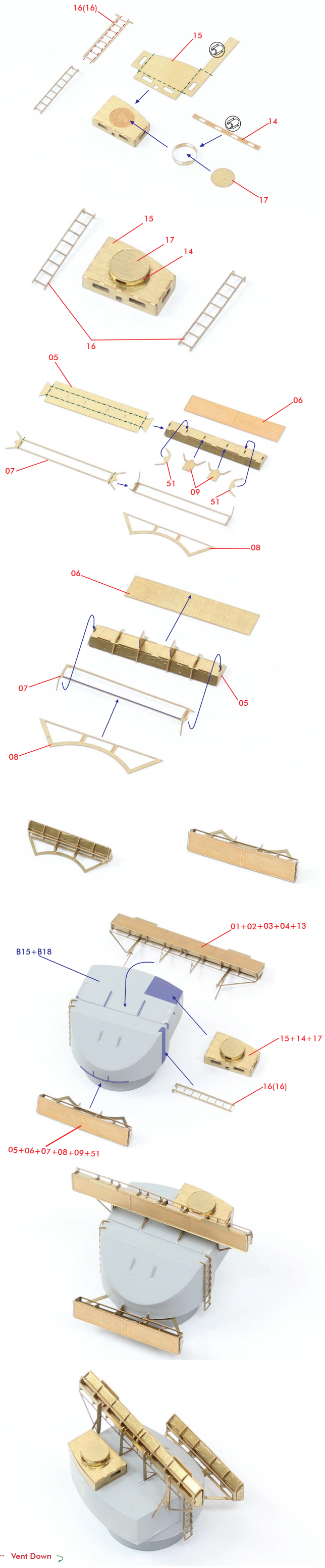

Vent Up Vent Down